Southwest Washington Chapter of ICC

This construction detail is illustrative of the minimum standard of construction based upon the 2003 IRC / WAC 51-51

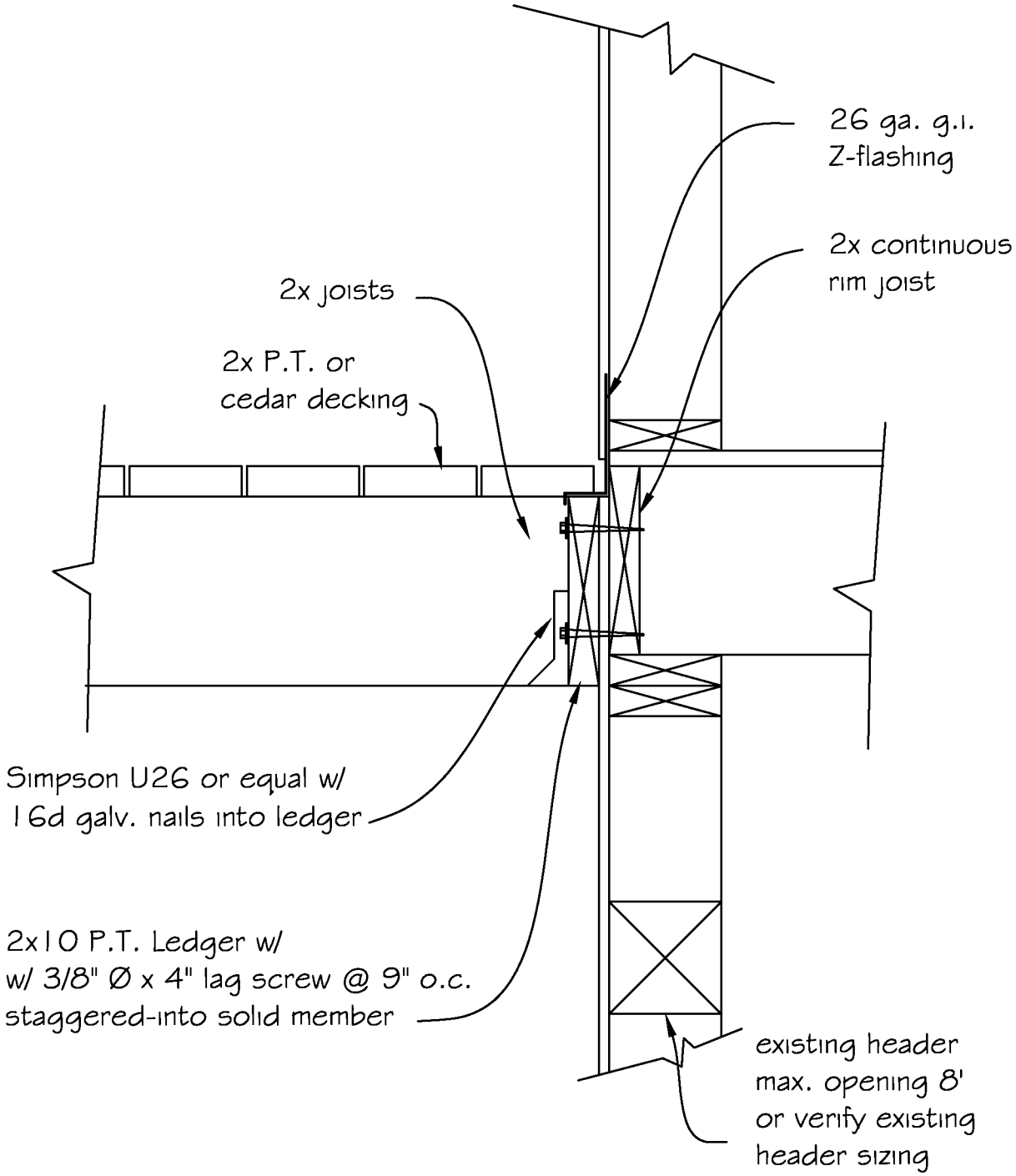

3 TYPICAL LEDGER CONNECTION

scale- 1-1/2" = 1'-0"